Circuit drawing of Stepper Motor controller

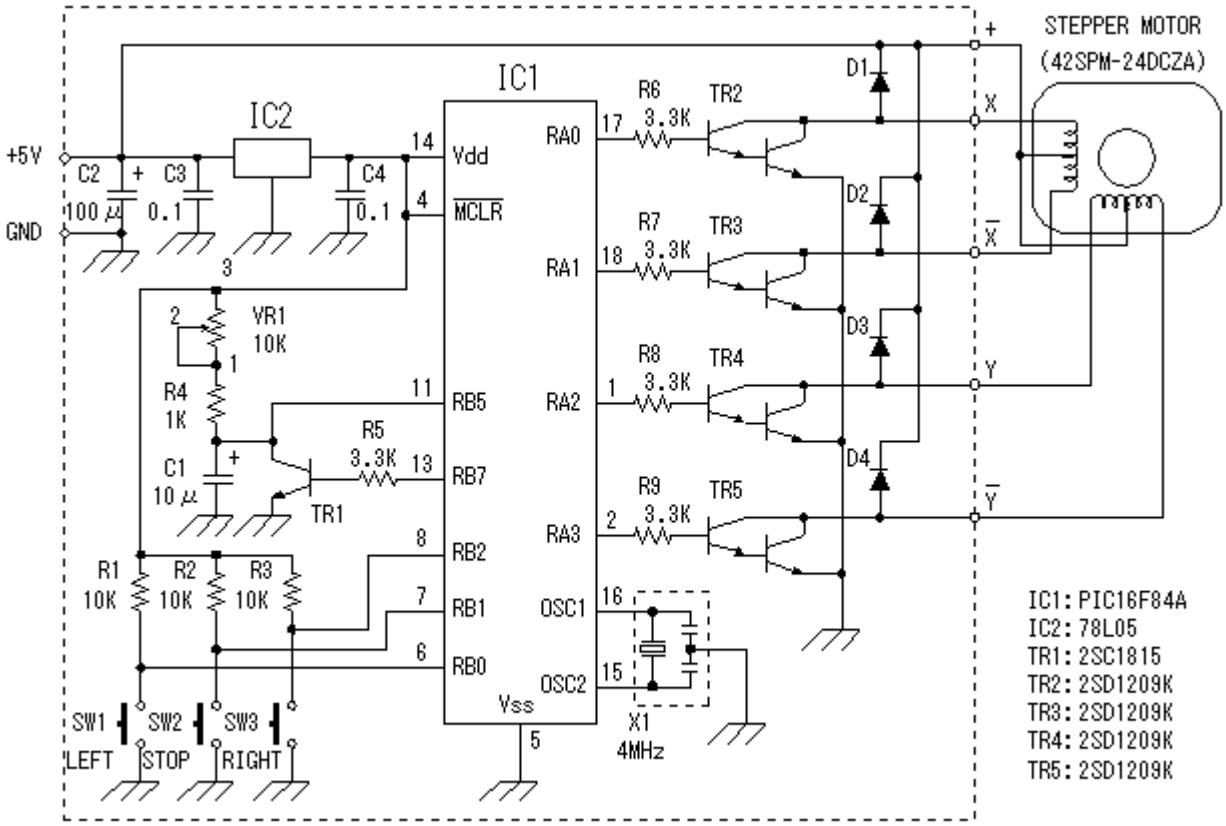

Pattern drawing of Stepper Motor controller

(Wiring side)

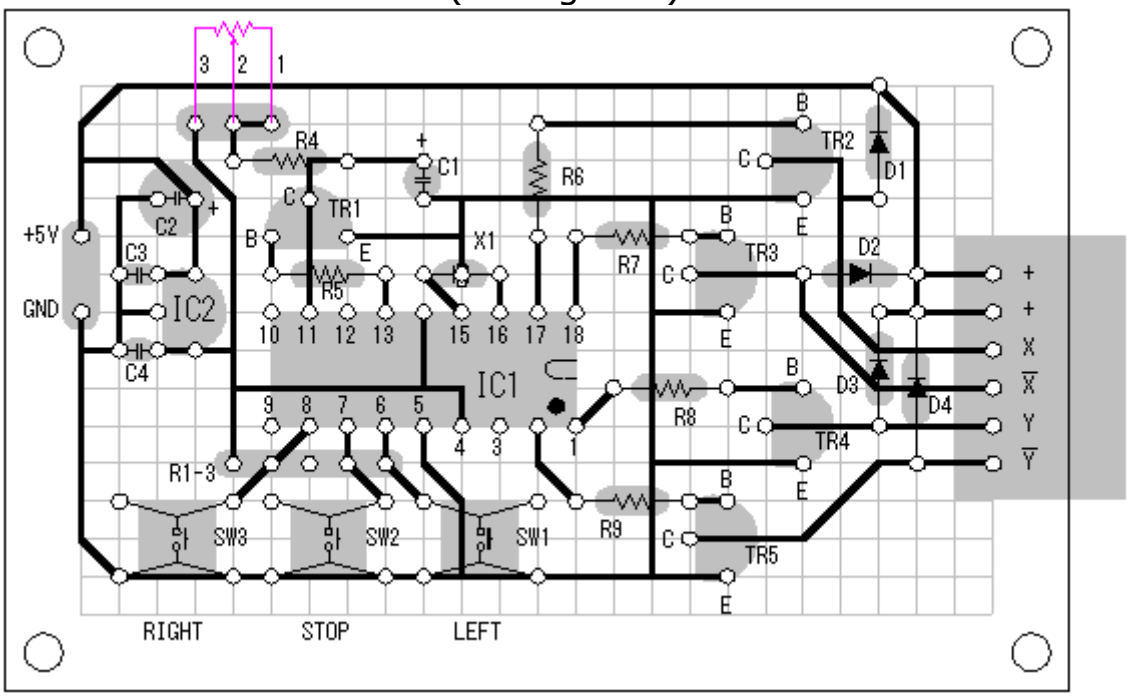

Pink line shows the external parts.