PBD 3517/1 Stepper Motor Drive Circuit

Description

PBD 3517/1 is a bipolar, monolithic, integrated circuit, intended to drive a stepper motor in a unipolar, bilevel way.

One PBD 3517/1 and a minimum of external components form a complete control and drive unit for LS-TTL- or microprocessor-controlled stepper motor system for currents up to 500mA. The driver is suited for applications requiring least-posssible RFI.

Motor performance can be increased by operating in a bilevel drive mode. This means that a high voltage pulse is applied to the motor winding at the beginning of a step, in order to give a rapid rise of current.

Key Features

- Complete driver and phase logic on chip
- 2 x 350 mA continuous-output current
- Half- and full-step mode generation
- LS-TTL-compatible inputs
- Bilevel drive mode for high step rates
- Voltage-doubling drive possibilities
- Half-step position-indication output
- Minimal RFI
- 16-pin plastic DIP package or 16 pin small outline wide body

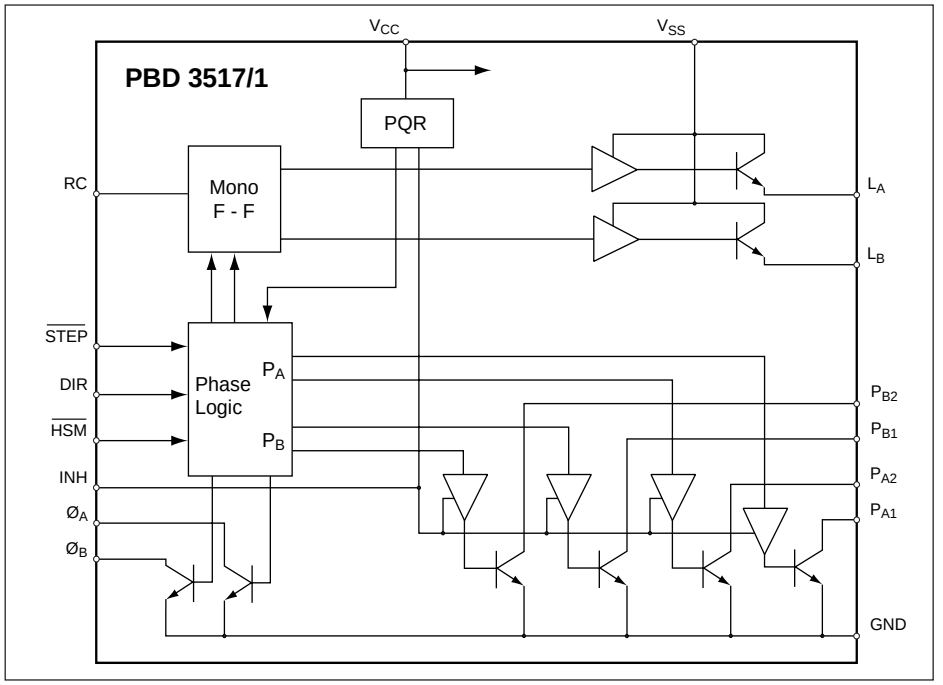

Figure 1. Block diagram.

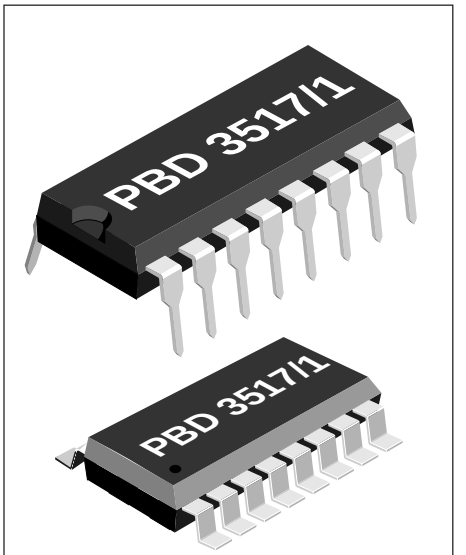

16-pin plastic DIP
16-pin SO (wide body)

Maximum Ratings

Parameter	Pin No.	Symbol	Min	Max	Unit
Voltage					
Logic supply	16	V_{CC}	0	7	V
Second supply	15	V_{SS}	0	45	V
Logic input	6, 7, 10, 11	VI	-0.3	6	V
Current					
Phase output	1, 2, 4, 5	I_P	0	500	mA
Second-level output	13, 14	I_L	-500	0	mA
Logic input	6, 7, 10, 11	I_I	-10		mA
The zero output	8, 9	I_O		6	mA
Temperature					
Operating junction temperature		T_J	-40	+150	°C
Storage temperature		T_S	-55	+150	°C
Power Dissipation (Package Data)					
Power dissipation at TA = 25°C, DIP package. Note 2.		P_D		1.6	W
Power dissipation, SO package. Note 3.		P_D		1.3	W

Recommended Operating Conditions

Parameter	Symbol	Min	Typ	Max	Unit
Logic supply voltage	V_{CC}	4.75	5	5.25	V
Second-level supply voltage	V_{SS}	10		40	V
Phase output current	I_P	0		350	mA
Second-level output current	I_L	-350		0	mA
Operating junction temperature	T_J	-20		+125	°C
Set-up time	t_s	400			ns
Step-pulse duration	t_p	800			ns

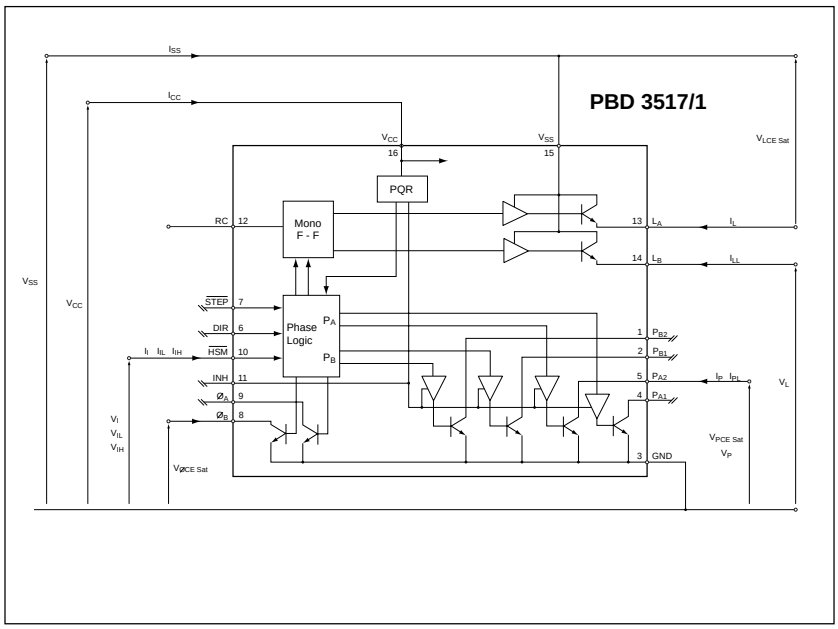

Figure 2. Definition of symbols.

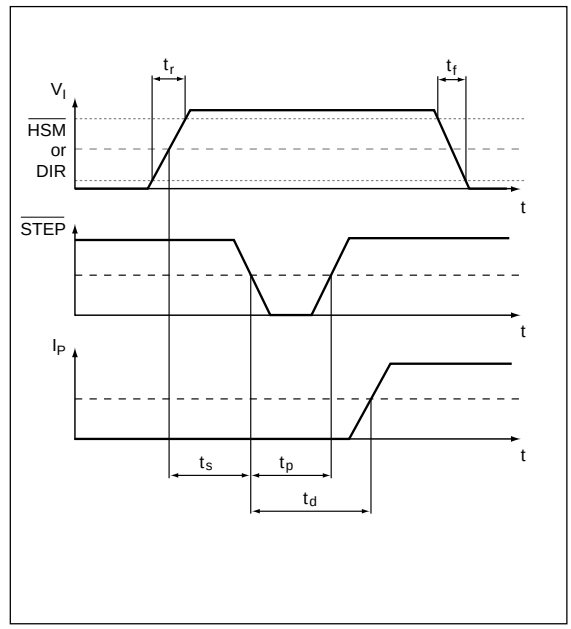

Figure 3. Timing diagram.

Electrical Characteristics

Electrical characteristics at T_A = +25°C, V_{CC} = +5.0 V, V_{MM} = +40 V, V_{SS} = +40 V unless otherwise specified.

Parameter	Symbol	Ref. Fig.	Conditions	Min	Typ	Max	Unit
Supply current	I_{CC}	2	INH = LOW		45	60	mA
		2	INH = HIGH		12		mA
Phase outputs							
Saturation voltage	$V_{PCE\ Sat}$	4	I_P = 350 mA			0.85	V
Leakage current	I_{PL}	2	V_P = 0 V			500	µA
Turn on, turn off	t_d	3	+70°C			3	µs
	t_d	3	+125°C			6	µs
Second-level outputs							
Saturation voltage	$V_{LCE\ Sat}$	4	I_L = -350 mA			2.0	V
Leakage current	I_{LL}	2	V_L = 0 V	-500			µA
On time	t_{On}	11	(note 4)	220	260	300	µs
Logic inputs							
Voltage level, HIGH	V_{IH}	2			2.0		V
Voltage level, LOW	V_{IL}	2				0.8	V
Input current, low	I_{IL}	2	V_I = 0.4 V	-400			µA
Input current, high	I_{IH}	2	V_I = 2.4 V			20	µA
Logic outputs							
Saturation voltage	$V_{ØCE\ Sat}$	5	$I_Ø$ = 1.6 mA			0.4	V

Notes

1. All voltages are with respect to ground. Current are positive into, negative out of specified terminal.
2 Derates at 12,8 mW/°C above +25°C.
3. Derates at 10.4 mW/°C above +25°C.
4. R_T = 47 kΩ, C_T = 10 nF.

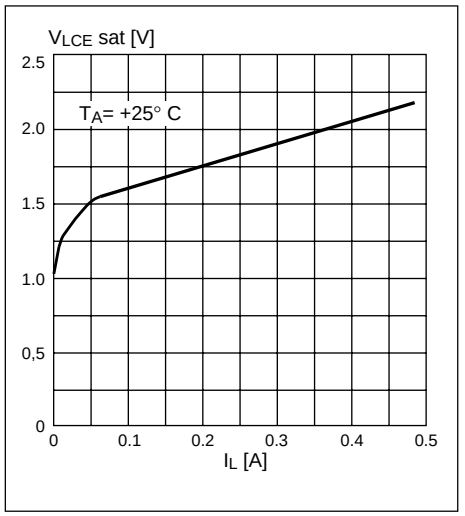

Figure 4. Typical phase output saturation voltage vs. output current.

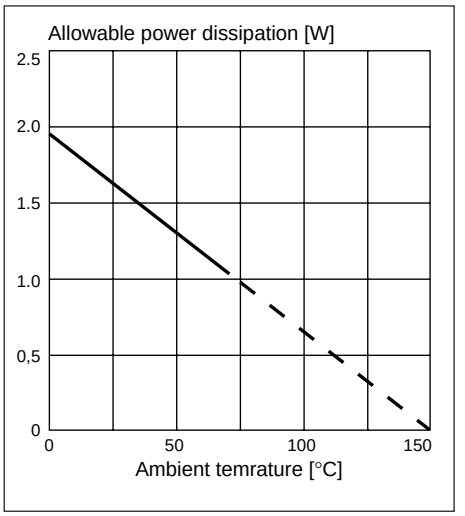

Figure 5. Typical second level saturation voltage vs output current.

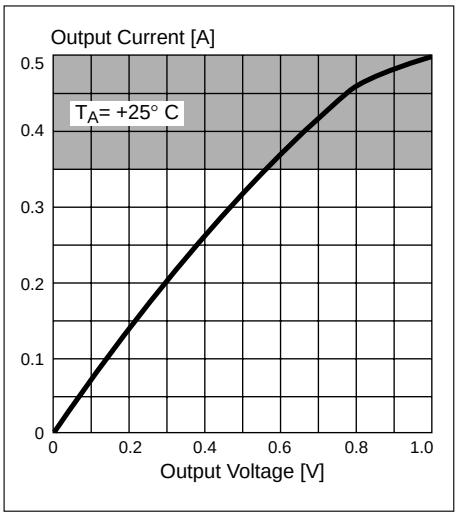

Figure

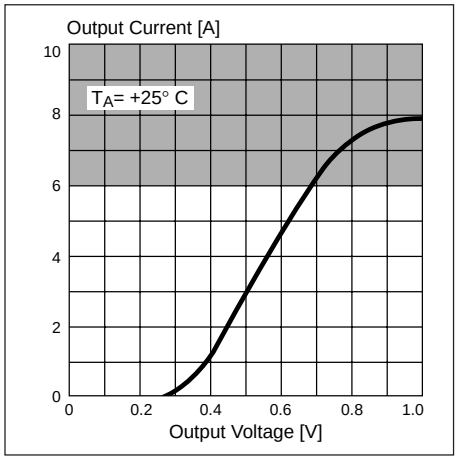

Figure 7. Typical $I_{Ø}$ vs. $V_{ØCE\ Sat}$. “Zero output” saturation.

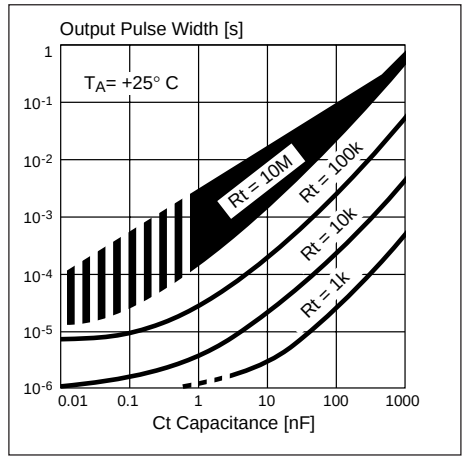

Figure 8. Typical t_{On} vs. C_T/R_T. Output pulse width vs. capacitance/resistance.

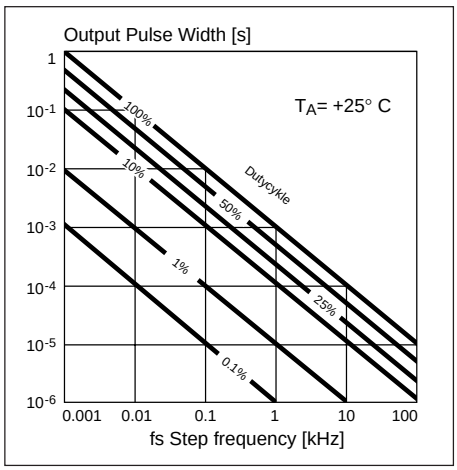

Figure 9. Typical t_{On} vs. f_s/dc. Output pulse width vs. step frequency/duty cycle.

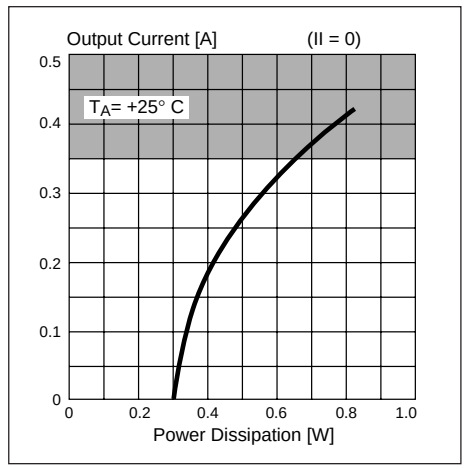

Figure 10. Typical P_{DP} vs. I_P. Power dissipation without second-level supply (includes 2 active outputs = FULL STEP).

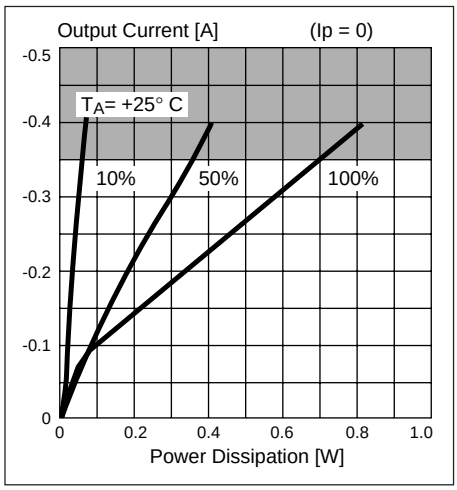

Figure 11. Typical P_{DI} vs. I_I. Power dissipation in the bilevel pulse when raising to the I_I value. One active output.

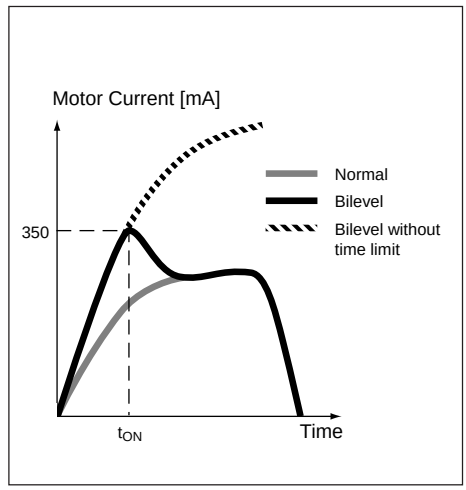

Figure 12 . Motor Current 1_p.

Diagrams

How to use the diagrams:

1. What is the maximum motor current in the application?
   - The ambient temperature sets the maximum allowable power dissipation in the IC, which relates to the motor currents and the duty cycle of the bilevel function. For PBD 3517/1, without any measures taken to reduce the chip temperature via heatsinks, the power dissipation vs. temperature follows the curve in figure 4.
   - Figures 9 and 10 give the relationship between motor currents and their dissipations. The sum of these power dissipations must never exceed the previously-established value, or life expectancy will be drastically shortened.
   - When no bilevel or voltage doubling is utilized, the maximum motor current can be found directly in figure 9.
2. How to choose timing components.
   - Figure 7 shows the relationship between C_T, R_T, and t_{On}. Care must be taken to keep the t_{On} time short, otherwise the current in the winding will rise to a value many times the rated current, causing an overheated IC or motor.
3. What is the maximum t_{On} pulse-width at a given frequency?
   - Figure 8 shows the relationship between duty cycle, pulse width, and step frequency. Check specifications for the valid operating area.
4. Figures 4, 5 and 6 show typical saturation voltages vs. output current levels for different output transistors.
5. Shaded areas represent operating conditions outside the safe operating area.

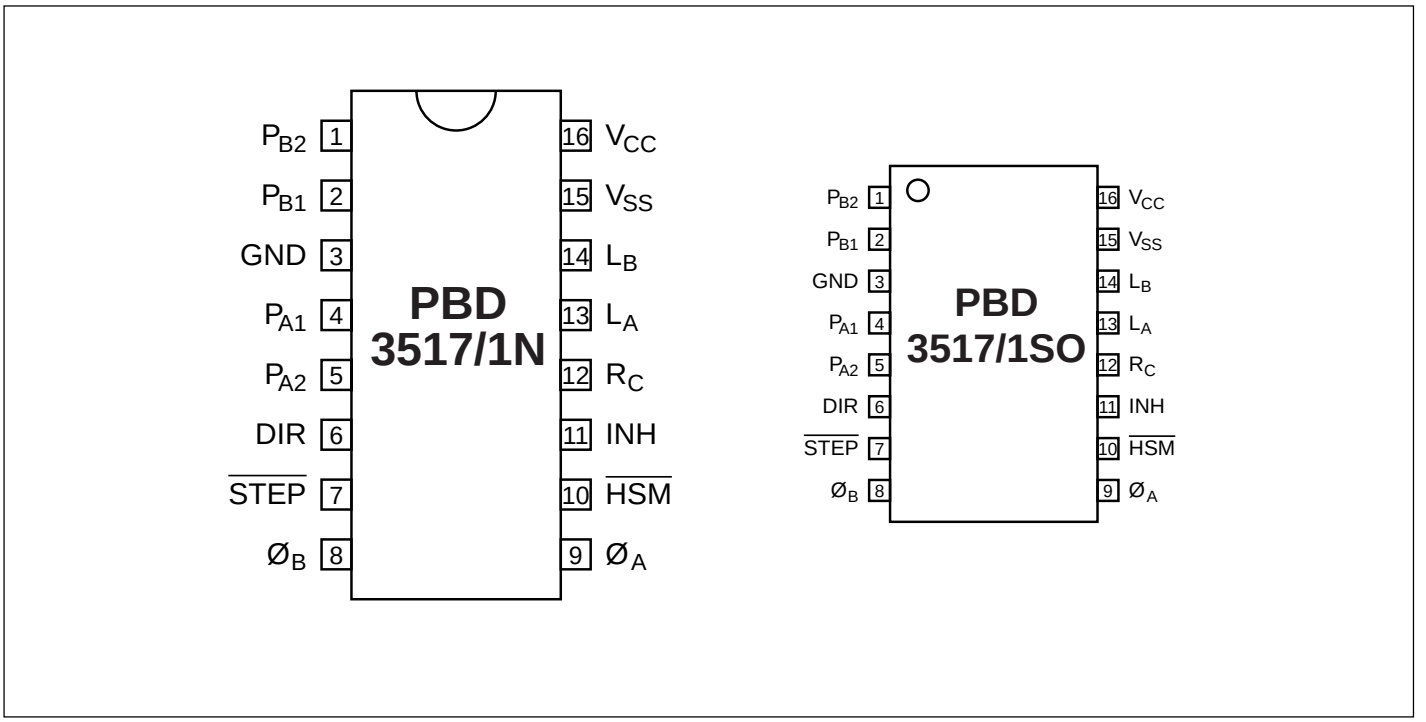

Figure 13. Pin configuration.

Pin Description

DIP	SO-pack.	Symbol	Description
1	1	P_{B2}	Phase output 2, phase B. Open collector output capable of sinking max 500 mA.
2	2	P_{B1}	Phase output 1, phase B. Open collector output capable of sinking max 500 mA.
3	3	GND	Ground and negative supply for both V_{CC} and V_{SS}.
4	4	P_{A1}	Phase output 1, phase A.
5	5	P_{A2}	Phase output 2, phase A.
6	6	DIR	Direction input. Determines in which rotational direction steps will be taken.
7	7	$\overline{STEP}$	Stepping pulse. One step is generated for each negative edge of the step signal.
8	8	ØB	Zero current half step position indication output for phase B.
9	9	ØA	Zero current half step position indication output for phase A.
10	10	$\overline{HSM}$	Half-step mode. Determines whether the motor will be operated in half or full-step mot. When pulled low, one step pulse will correspond to a half step of the motor.
11	11	INH	A high level on the inhibit input turns all phase output off.
12	12	RC	Bilevel pulse timing pin. Pulse time is approximately $t_{on} = 0.55 \cdot R_T \cdot C_T$
13	13	LA	Second level (bilevel) output, phase A.
14	14	LB	Second level (bilevel) output, Phase B.
15	15	V_{SS}	Second level supply voltage, +10 to +40 V.
16	16	V_{CC}	Logic supply voltage, nominally +5 V.

Functional Description

The circuit, PBD 3517/1, is a high perform-ance motor driver, intended to drive a stepper motor in a unipolar, bilevel way. Bilevel means that during the first time after a phase shift, the voltage across the motor is increased to a second voltage supply, V_{SS}, in order to obtain a more-rapid rise of current, see figure 11.

The current starts to rise toward a value which is many times greater than the rated winding current. This compen-sates for the loss in drive current and loss of torque due to the back emf of the motor.

After a short time, t_{On}, set by the monostable, the bilevel output is switched off and the winding current flows from the V_{MM} supply, which is chosen for rated winding current. How long this time must be to give any increase in performance is determined by V_{SS} voltage and motor data, the L/R time-constant.

In a low-voltage system, where high motor performance is needed, it is also possible to double the motor voltage by adding a few external components, see figure 14.

The time the circuit applies the higher voltage to the motor is controlled by a monostable flip-flop and determined by the timing components R_T and C_T.

The circuit can also drive a motor in traditional unipolar way.

An inhibit input (INH) is used to switch off the current completely.

Logic inputs

All inputs are LS-TTL compatible. If any of the logic inputs are left open, the circuit will accept it as a HIGH level. PBD 3517/1 contains all phase logic necessary to control the motor in a proper way.

STEP — Stepping pulse

One step is generated for each negative edge of the STEP signal. In half-step mode, two pulses will be required to move one full step. Notice the set up time, t_s, of DIR and HSM signals. These signals must be latched during the negative edge of STEP, see timing diagram, figure 3.

DIR — Direction

DIR determines in which direction steps will be taken. Actual direction depends on motor and motor connections. DIR can be changed at any time, but not simultan-eously with STEP, see timing diagram, figure 3.

HSM determines whether the motor will be controlled in full-step or half-step mode. When pulled low, a step-pulse will correspond to a half step of the motor. HSM can be changed at any time, but not simultaneously with STEP, see timing diagram, figure 3.

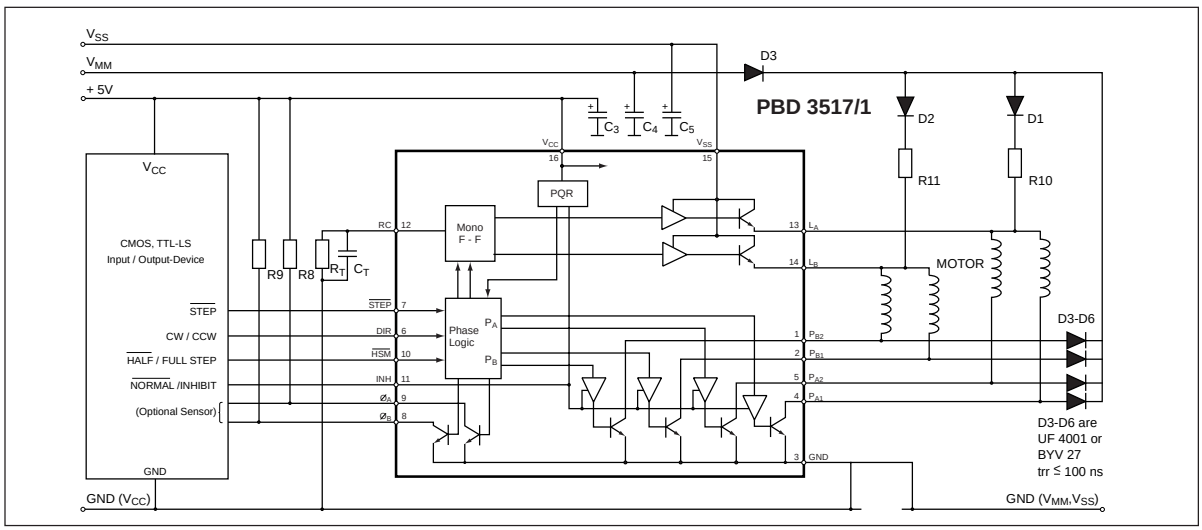

Figure 14. Typical application.

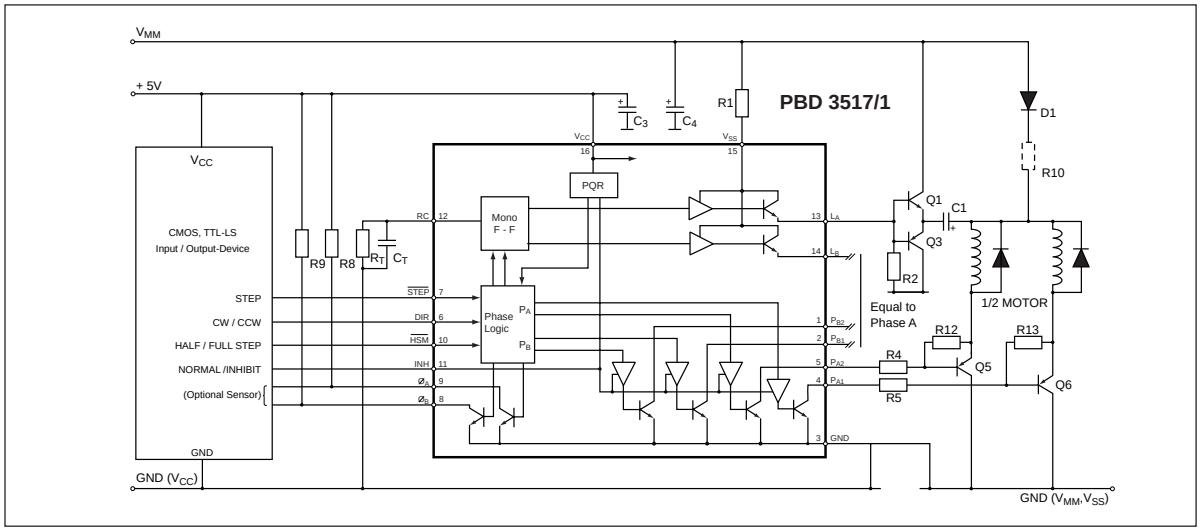

Figure 15. Voltage doubling with external transistors.

Purpose of external components

For figures 14 and 15. Note that “Larger than …” is normally the vice versa of “Smaller than … .”

Component	Purpose	Value	Larger than value	Smaller than value
D1, D2	Passes low power to motor and prevents high power from shorting through low power supply	I_f = 1A 1N4001, UF4001	Increases price	Decreases max current capability
D3 … D6	Inductive current supressor	I_f = 1A	Increases price	Decreases current turn-off capability
		t_{rr} = 100nS e.g. BYV27 UF4001 RGPP10G RGPP30D	Slows down turn-off time. Voltage at anode might exceed voltage breakdown	Speeds up turn-off time.
R1	Base drive current limitter	R = 20ohm $P = R1\left(\frac{V_{mm}}{R_1 + R_2}\right)^2$	Slows down Q1’s turn-on and Q4’s turn-off time.	Speeds up Q1’s turn-on and Q4’s turn-off time.
R2, R3	Base discharge resistor	R = 240ohm $P = R1\left(\frac{V_{mm}}{R_1 + R_2}\right)^2$	Slows down Q1’s turn-off and Q4’s turn-on time.	Speeds up Q1’s turn-off and Q4’s turn-on time.
R4 … R7	External transistor base driver	$R = \frac{V_{mm} - V_{be} - V_{ce}}{I_4 - \left(\frac{V_{be}}{R12}\right)}$ $P > (I_4)^2 \bullet R4$ Check hfe.	Decreases ext. transistor I_C max. Lowers 3517 power dissipation.	Increases ext. transistor I_C max. Increases 3517 power dissipation.
R8, R9	ØA, ØB pull-up resistors	R = 5ohm @ pull-up voltage = 5V. $P = \frac{(V_{CC})^2}{R}$	Increases noise sensitivity, worse logic-level definition Less stress on ØA, ØB output transistors	Increases noise immunity, better logic-level definition. Stress on ØA, ØB output transistors.
R10, R11	Limit max. motor current. Resistors may be omitted. (Check motor specifications first.)	$R = \frac{V_{mm} - V_{Motor} - V_{CESat}}{I_{Motor\ max}}$	Decreases motor current.	Increases motor current.
R12 … R15	External transistor base discharge.	$R = \frac{V_{be_a}}{I_{12}}$ 15W $P > V_{be} \bullet I_{12}$	Slows down external transistor turn-off time. Lowers 3517 power dissipation	Speeds up external transistor turn-off time. Increases 3517 power dissipation
RT, CT	Sets L_A and L_B on time when triggered by STEP.	R = 47kohm, C = 10nf P < 250mW	Increases on time.	Decreases on time.
C1, C2	Stores the doubling voltage.	C = 100µF $V_C \geq$ 45V	Increases effective on-time during voltage doubling	Decreases effective on-time during voltage doubling.
C3 … C5	Filtering of supply-voltage ripple and take-up of energy feedback from D3 … D6	C ≥ 10 µF	Increases price, better filtering, decreases risk of IC breakdown	Decreases price, more compact solution.
		$V_{Rated} > V_{mm}, V_{ss}$ or V_{cc}	Increases price	Risk for capacitor breakdown.
Q1, Q2	Activation transistor of voltage doubling.	I_C as motor requires.	Increases price.	Decreases max I_m during voltage doubling.
Q3, Q4	Charging of voltage doubling capacitor	$I_C = \frac{(V_{mm} - V_f - V_{CE}) \bullet C1}{\left(\frac{1}{f_{Step}} - 0.55 \bullet R_T \bullet C_T\right)}$		
Q5 … Q8	Motor current drive transistor.	I_C as motor requires. PNP power trans.	Increases max current capability.	Decreases max current capability.

INH — Inhibit

A HIGH level on the INH input,turns off all phase outputs to reduce current consumption.

Reset

An internal Power-On Reset circuit connected to V_{cc} resets the phase logic and inhibits the outputs during power up, to prevent false stepping.

Output Stages

The output stage consists of four open-collector transistors. The second high-voltage supply contains Darlington transistors.

Phase Outputs

The phase outputs are connected directly to the motor as shown in figure 14.

Bilevel Technique

The bilevel pulse generator consists of two monostables with a common RC network.

The internal phase logic generates a trigger pulse every time the phase changes state. The pulse triggers its own monostable which turns on the output transistors for a precise period of time:

$t_{On} = 0.55 \bullet C_T \bullet R_T$.

See pulse diagrams, figures 16 through 20.

Bipolar Phase Logic Output

The $Ø_A$ and $Ø_B$ outputs are generated from the phase logic and inform an external device if the A phase or the B phase current is internally inhibited. These outputs are intended to support if it is legal to correctly go from a half-step mode to a full-step mode without loosing positional information.

The PBD 3517/1 can act as a controller IC for 2 driver ICs, the PBL 3770A. Use P_{A1} and P_{B1} for phase control, and $Ø_A$ and $Ø_B$ for I_0 and I_1 control of current turn-off.

Applications Information

Logic inputs

If any of the logic inputs are left open, the circuit will treat it as a high-level input. Unused inputs should be connected to proper voltage levels in order to get the highest noise immunity.

Phase outputs

Phase outputs use a current-sinking method to drive the windings in a unipolar way. A common resistor in the center tap will limit the maximum motor current.

Fast free-wheeling diodes must be used to protect output transistors from inductive spikes. Alternative solutions are shown in figures 21 through 25 on pages 6 - 10.

Series diodes in V_{MM} supply, prevent V_{SS} voltage from shorting through the V_{MM} power supply. However, these may be omitted if no bilevel is used. The V_{SS} pin must not be connected to a lower voltage than V_{MM}, but can be left unconnected.

Zero outputs

$Ø_A$ and $Ø_B$, “zero A” and “zero B,” are open-collector outputs, which go high when the corresponding phase output is inhibited by the half-step-mode circuitry. A pull-up resistor should be used and connected to a suitable supply voltage (5 kohms for 5V logic). See “Bipolar phase logic output.”

Interference

To avoid interference problems, a good idea is to route separate ground leads to each power supply, where the only common point is at the 3517/1’s GND pin. Decoupling of V_{SS} and V_{MM} will improve performance. A 5 kohm pull-up resistor at logic inputs will improve level definitions, especially when driven by open-collector outputs.

Input and Output Signals for Different Drive Modes

The pulse diagrams, figures 16 through 20, show the necessary input signals and the resulting output signals for each drive mode.

On the left side are the input and output signals, the next column shows the state of each signal at the cursor position marked “C.”

STEP is shown with a 50% duty cycle, but can, of course, be with any duty cycle, as long as pulse time (t_p) is within specifications.

P_A and P_B are displayed with low level, showing current sinking.

L_A and L_B are displayed with high level, showing current sourcing.

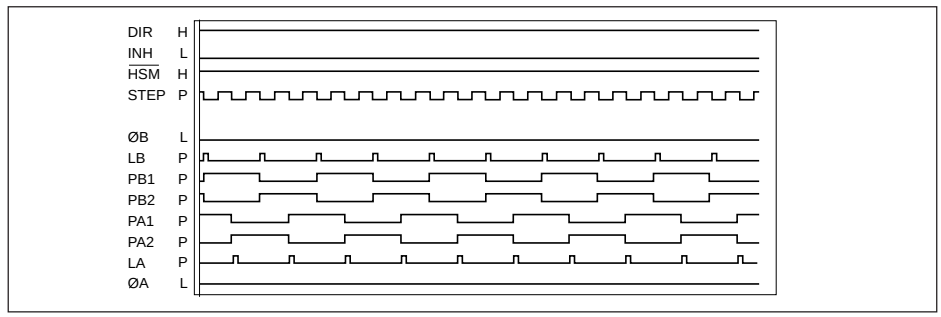

Figure 16. Full-step mode, forward. 4-step sequence. Gray-code +90° phase shift.

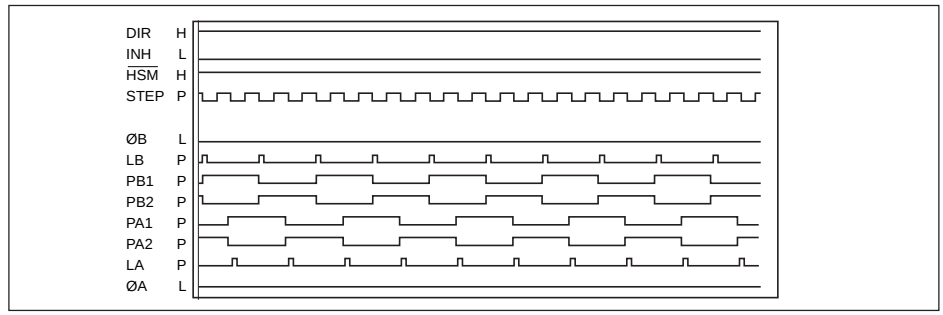

Figure 17. Full-step mode, reverse. 4-step sequence. Gray-code -90° phase shift.

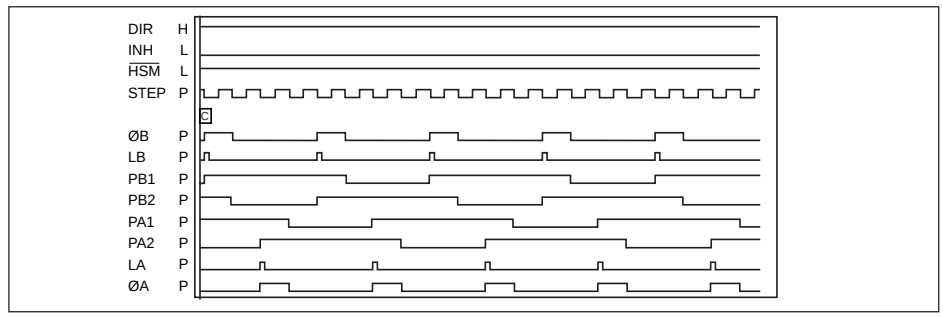

Figure 18. Half-step mode, forward. 8-step sequence.

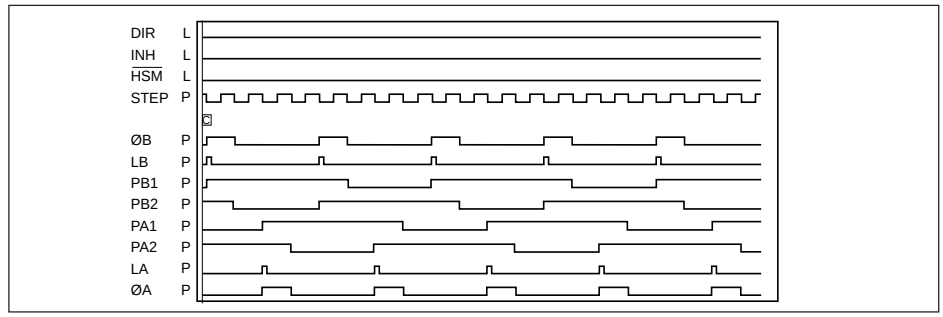

Figure 19. Half-step mode, reverse. 8-step sequence.

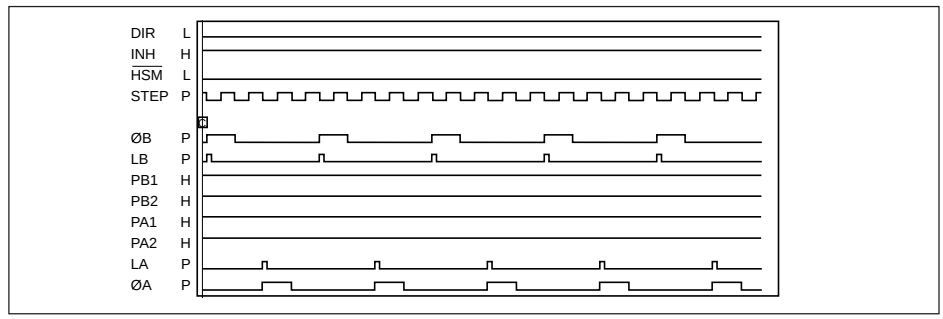

Figure 20. Half-step mode, inhibit.

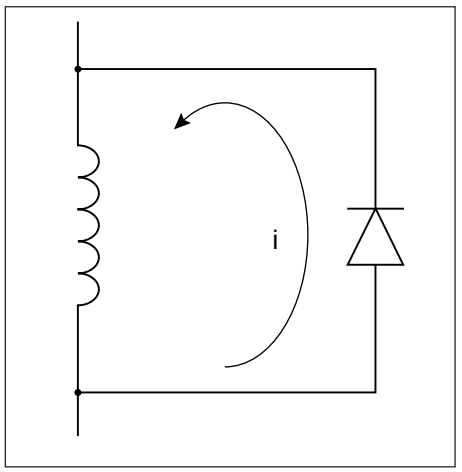

Figure 21. Diode turn-off circuit.

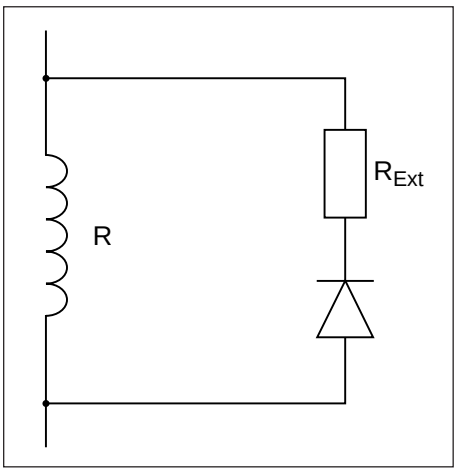

Figure 22. Resistance turn-off circuit.

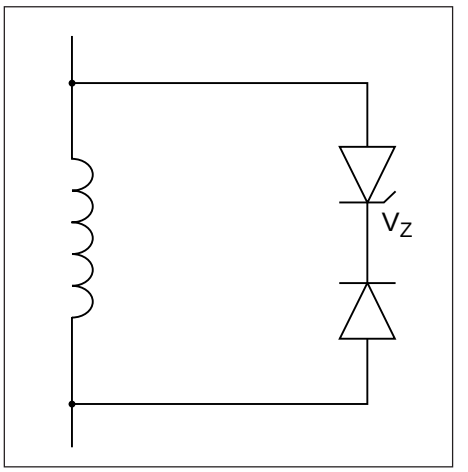

Figure 23. Zener diode turn-off circuit.

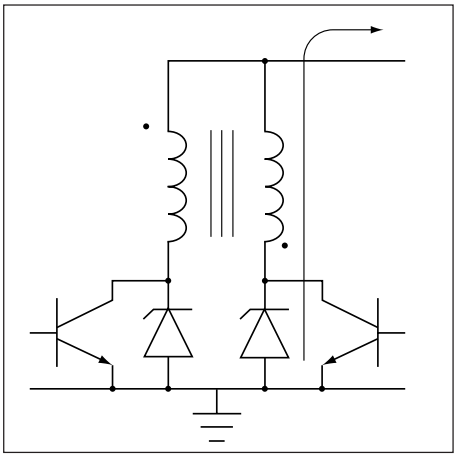

Figure 24. Power return turn-off circuit.

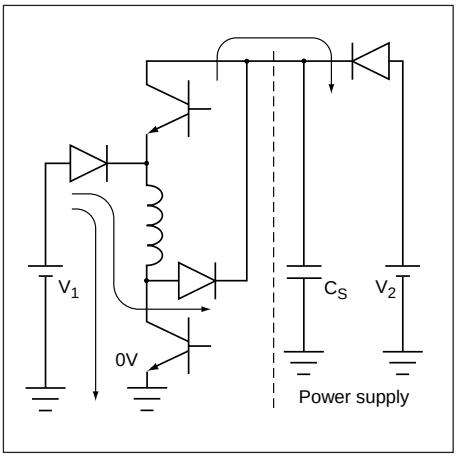

Figure 25. Power return turn-off circuit for bilevel .

User Hints

1. Never disconnect ICs or PC-boards when power is supplied.
2. If second supply is not used, disconnect and leave open V_{SS}, L_A, L_B, and RC. Preferably replace the V_{MM} supply diodes (D1, D2) with a straight connection.
3. Remember that excessive voltages might be generated by the motor, even though clamping diodes are used.
4. **Choice of motor.** Choose a motor that is rated for the current you need to establish desired torque. A high supply voltage will gain better stepping performance. If the motor is not specified for the V_{MM} voltage, a current limiting resistor will be necessary to connect in series with center tap. This changes the L/R time constant.
5. Never use L_A or L_B for continuous output at high currents. L_A and L_B on-time can be altered by changing the RC net. An alternative is to trigger the mono-flip-flop by taking a STEP and then externally pulling the RC pin (12) low (0V) for the desired on-time.
6. Avoid V_{MM} and V_{SS} power supplies with serial diodes (without filter capacitor) and/or common ground with V_{CC}. The common place for ground should be as close as possible to the IC's ground pin (pin 3).
7. To change actual motor rotation direction, exchange motor connections at P_{A1} and P_{A2} (or P_{B1} and P_{B2}).
8. **Half-stepping.** in the half-step mode, the power input to the motor alternates between one or two phase windings. In half-step mode, motor resonances are reduced. In a two-phase motor, the electrical phase shift between the windings is 90 degrees. The torque developed is the vector sum of the two windings energized. Therefore, when only one winding is energized, which is the case in half-step mode for every second step, the torque of the motor is reduced by approximately 30%. This causes a torque ripple.
9. **Ramping.** Every drive system has inertia which must be considered in the drive scheme. The rotor and load inertia plays a big role at higher speeds. Unlike the DC motor, the stepper motor is a synchronous motor and does not change speed due to load variations. Examination of typical stepper motors' torque versus speed curves indicates a sharp torque drop-off for the start-stop without error curve. The reason for this is that the torque requirements increase by the cube of the speed change. As it can be seen, for good motor performance, controlled acceleration and deceleration should be considered.

Common Fault Conditions

- V_{MM} supply not connected, or V_{MM} supply not connected through diodes.
- The inhibit input not pulled low or floating. Inhibit is active high.
- A bipolar motor without a center tap is used. Exchange motor for unipolar version. Connect according to figure 14.
- External transistors connected without proper base-current supply resistor.
- Insufficient filtering capacitors used.
- Current restrictions exceeded.
- L_A and L_B used for continuous output at high currents. Use the RC network to set a proper duty cycle according to specifications, see figures 6 through 11.
- A common ground wire is used for all three power supplies. If possible, use separate ground leads for each supply to minimize power interference.

Drive Circuits

If high performance is to be achieved from a stepper motor, the phase must be energized rapidly when turned on and also de-energize rapidly when turned off. In other words, the phase current must increase/decrease rapidly at phase shift.

Phase Turn-off Considerations

When the winding current is turned off the induced high voltage spike will damage the drive circuits if not properly suppressed. Different turn-off circuits are used; e. g. :

Diode turn-off circuit (figure 21)

— Slow current decay
— Energy lost mainly in winding resistance
— Potential cooling problems.

Resistance T O C (figure 22)

— Somewhat faster current decay
— Energy lost mainly in R-Ext
— Potential cooling problems

Zener diode T O C (figure 23)

Relatively high V_Z gives:

— Relatively fast current decay
— Energy lost mainly in V_Z
— Potential cooling problems

Power return T O C for unipolar drive (figure 24)

Relatively high V_Z gives:

— Relatively fast current decay
— Energy returned to power supply
— Only small energy losses
— Winding leakage flux must be considered
— Potential cooling problems

Power return to T O C for bilevel drive (figure 25)

— Very fast current decay
— Energy returned to power supply
— Only small energy losses
— Winding leakage flux must be considered

Ordering Information

Package	Part No.
DIP	PBD 3517/1N
SO	PBD 3517/1SO
SO Tape & Reel	PBD 3517/1SO:T

Information given in this data sheet is believed to be accurate and reliable. However no responsibility is assumed for the consequences of its use nor for any infringement of patents or other rights of third parties which may result from its use. No license is granted by implication or otherwise under any patent or patent rights of Ericsson Components. These products are sold only according to Ericsson Components' general conditions of sale, unless otherwise confirmed in writing.

Specifications subject to change without notice.
1522-PBD 3517/1 Uen Rev. B
© Ericsson Components AB 1998

ERICSSON

Ericsson Components AB
S-164 81 Kista-Stockholm Sweden
Telephone: (08) 757 50 00